DO NOT SCALE DRG

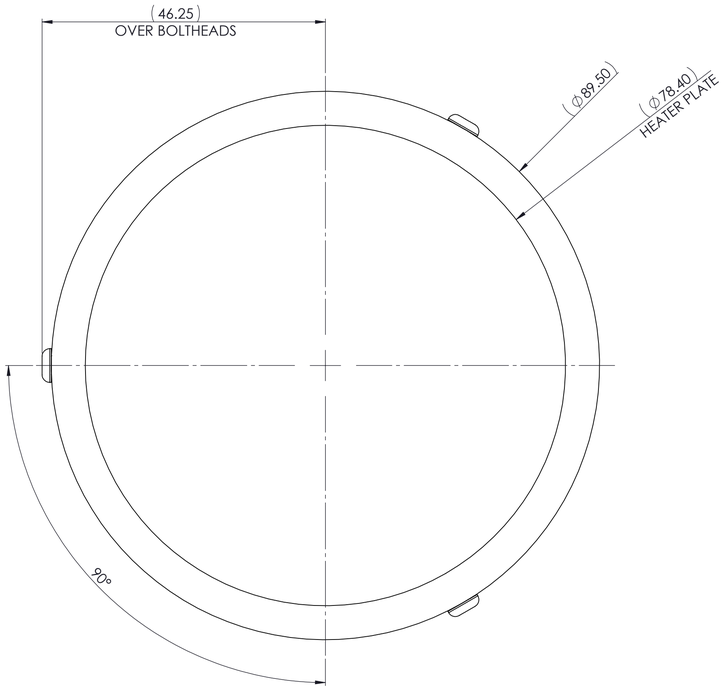

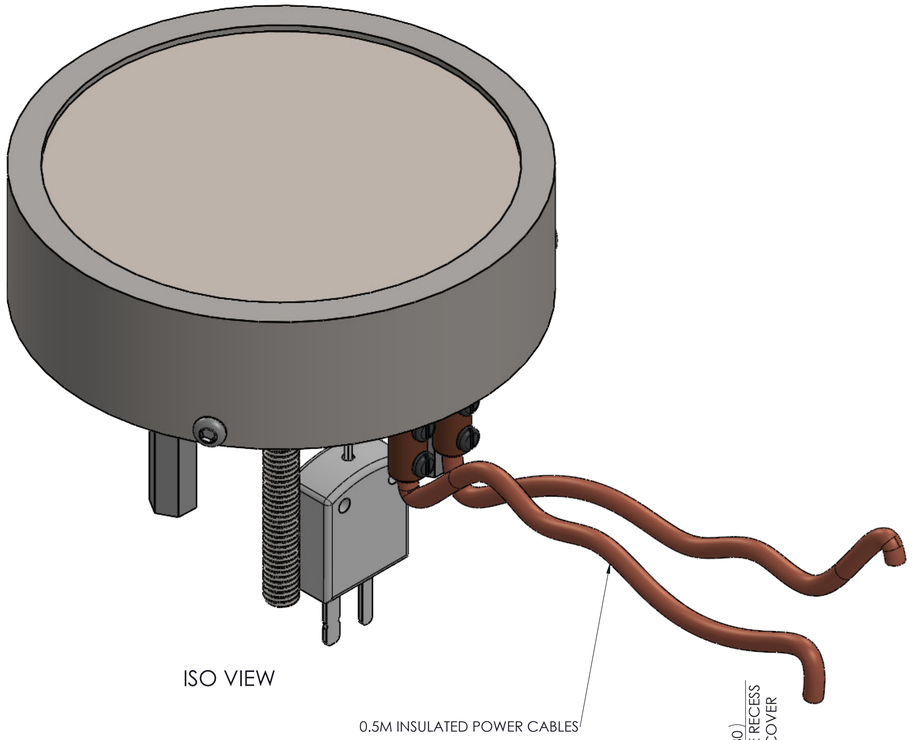

ISO VIEW

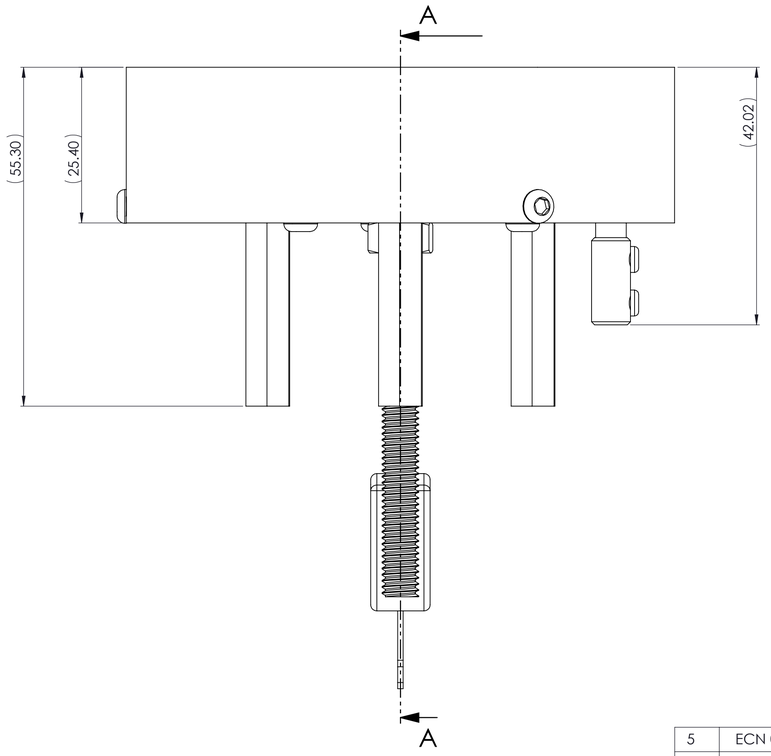

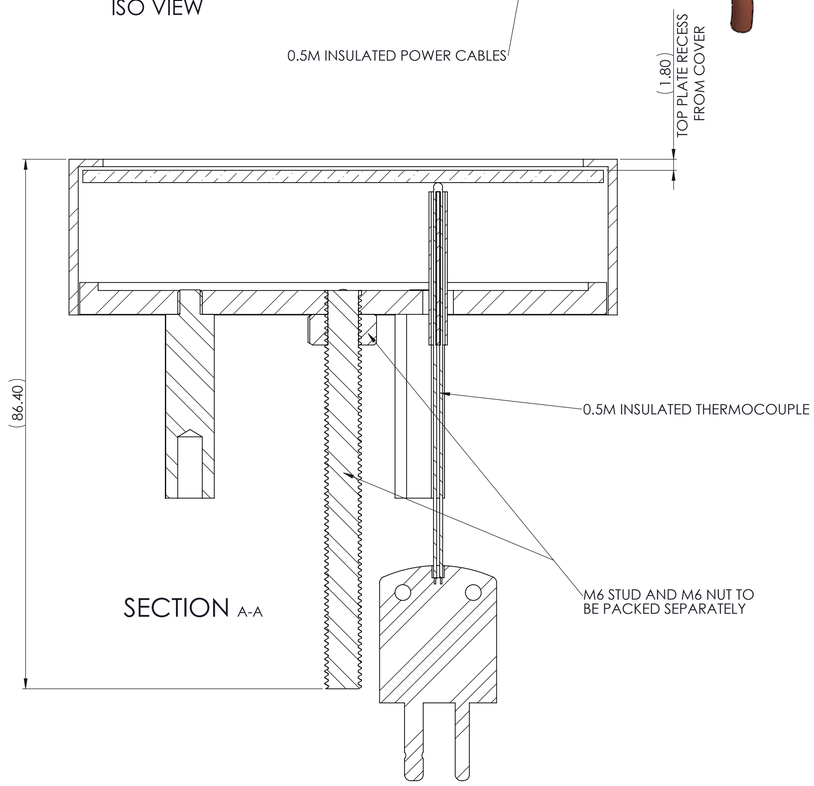

SECTION A-A

HEATER SPECIFICATION

HEATER/STAGE DETAILS

HEATER TYPE:	SUBSTRATE HEATER
TOP PLATE TEMPERATURE:	800°C
ENVIRONMENT:	Air, High Vacuum, Inert
ELEMENT:	NiCr
THERMOCOUPLE:	TYPE 'K'
UNIFORMITY:	N/A
SUBSTRATE:	N/A
LEAK RATE:	N/A

ELECTRICAL

HEATER COLD RESISTANCE:	APPROX. 4.7Ω
RAMP RATE:	50°C / min
POWER REQUIREMENTS:	APPROX. 35V, 8A
CABLE LENGTH & INSULATION:	500 mm, THERMOCOUPLE FIBREGLASS INSULATED, POWER CABLES CERAMIC FISH SPINE BEAD INSULATED (NOT SHOWN)

COOLING

WATER COOLING:	N/A N/A
GAS COOLING:	N/A

EXTRAS

ROTATION SPEED:	N/A
BIAS TYPE & POWER:	N/A
TRAVEL DISTANCE:	N/A
ADDITIONAL EXTERNAL HEAT SHIELDING:	N/A

NO.	REVISION DESCRIPTION	BY
5	ECN 0846	BS
	Heater case updated hot zone size	

©THERMIC EDGE

NOTE: THIS DRAWING CONTAINS PROPRIETORY INFORMATION WHICH MAY NOT BE DISCLOSED TO OTHERS NOR USED FOR MANUFACTURE WITHOUT WRITTEN PERMISSION FROM THERMIC EDGE.

DEBURR ALL SHARP EDGES
ALL SURFACES TO BE FREE FROM NICKS AND SCRATCHES

TOLERANCES (EXCEPT AS NOTED): ANGULAR: ± 30'

DIM	UNDER 250mm	250-500mm	500-1500mm	ABOVE 1500
X =	±0.5mm	±1.0mm	±1.5mm	±2.0mm
X.X =	±0.2mm	±0.5mm	±0.75mm	±1.5mm
X.XX =	±0.1mm	±0.2mm	±0.4mm	±0.75mm

sales@thermic-edge.com
Tel: +44 (0)1424 850811

Thermic Edge
Vacuum Heating Technology

30 Brunel Rd.
St. Leonards On Sea
EAST SUSSEX
TN38 9RT
UNITED KINGDOM

SCALE: 2:1	DRAWN: GW	CHECKED: PB	PAGE 1 OF 1
A1	DATE: 18 Jul 24	DATE: 01 Sep 25	

TITLE:
3 INCH NICR HEATER WITH M4 MALE TO FEMALE STANDOFFS

DWG NO: HCM6-NCR-03-GA

REVISION: 5